MOVETEC LINEAR ACTUATOR

# MLA16S

Compact electric linear actuator
2000 N | 24 V DC | 100 - 400 mm

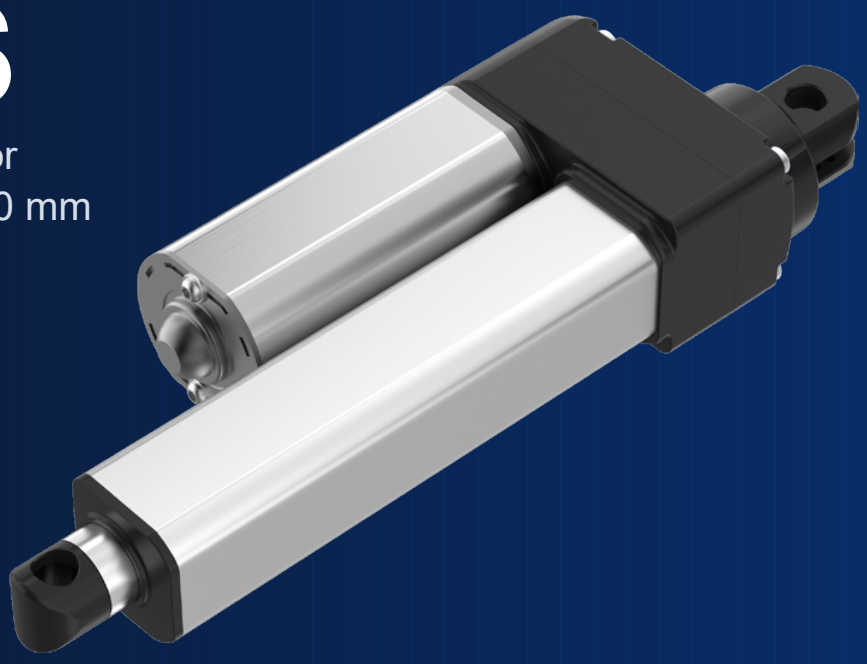

**2000 N**
Max. push load

**24 V DC**
Supply voltage

**100-400**
Stroke (mm), 5 versions

**10 %**
Duty cycle

## PRODUCT OVERVIEW

The MLA16S is a compact, cost-effective electric linear actuator from Movetec Solutions. Built on a proven platform, it combines a small installation footprint with a push force of up to 2000 N and integrated limit switches - ready to install straight out of the box.
The MLA16S is available in five standard stroke lengths and is designed for furniture, comfort and light industrial applications where reliable, quiet movement and a low total cost are key.

## KEY FEATURES

- Push load up to 2000 N
- 24 V DC motor
- Five stock strokes: 100 / 200 / 250 / 300 / 400 mm
- Built-in limit switches at end of stroke
- Compact design for space-constrained installation
- Low noise: ≤ 56 dB(A) at no load
- Operating temperature +5 to +45 °C

## TYPICAL APPLICATIONS

**Recliners & sofas** | **Comfort furniture** | **Beds & care** | **Hatches & lids** | **Light automation**

Available from stock in the Movetec webshop. For custom strokes, connectors or options, contact Movetec Solutions.

## GENERAL SPECIFICATIONS

| Parameter | Value |
|---|---|
| **Motor voltage** | 24 V DC |
| **Max. load, push** | 2000 N |
| **Max. load, pull** | 1500 N |
| **Gear type** | Gear J (Movetec version) |
| **Speed, no load** | 15.8 mm/s (typical) |
| **Speed, with load** | 9.5 mm/s (typical) |
| **Current, no load / with load** | 2.0 A / 3.7 A (typical) |
| **Duty cycle** | 10 % |
| **Limit switches** | Built-in, cut off at end of stroke |
| **Noise level (no load)** | ≤ 56 dB(A) |
| **Operating temperature** | +5 °C to +45 °C |
| **Rear / front attachment** | Plastic U-clevis / plastic slotless, hole ø 10.2 mm |

## STROKE VERSIONS - WEBSHOP STANDARD RANGE

| Item no. | Stroke (mm) | Retracted length (mm) | Max. push (N) | Voltage |
|---|---|---|---|---|
| **MLA16S-100** | 100 | 235 | 2000 | 24 V DC |
| **MLA16S-200** | 200 | 335 | 2000 | 24 V DC |
| **MLA16S-250** | 250 | 385 | 2000 | 24 V DC |
| **MLA16S-300** | 300 | 435 | 2000 | 24 V DC |
| **MLA16S-400** | 400 | 535 | 2000 | 24 V DC |

Extended length = retracted length + stroke. Tolerances according to approved drawing.

## DIMENSIONS (MM)

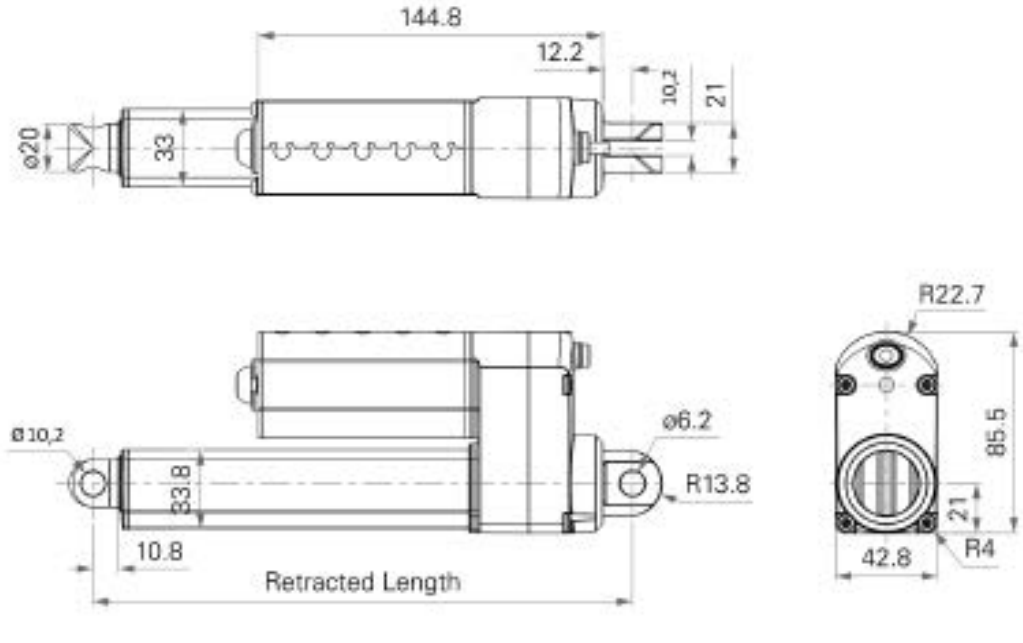

# MLA16S Performance & Connection

Performance data, 24 V DC motor, duty cycle 10 %

## SPEED VS. LOAD

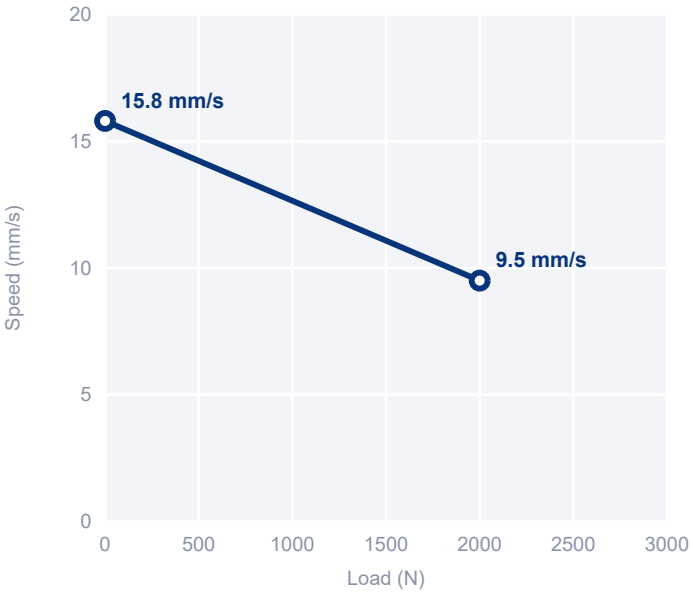


## CURRENT VS. LOAD

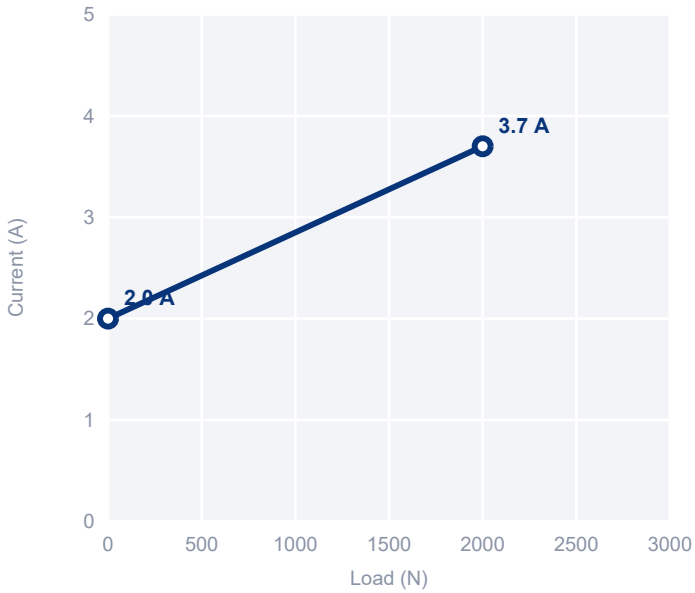


Typical values measured when extending under push load with Movetec/TiMOTION control boxes; approx. 10 % tolerance depending on control box.
No load approx. 32 V DC at the actuator; at rated load approx. 24 V DC.

## WIRE DEFINITION - LIMIT SWITCHES CUT OFF AT END OF STROKE

| Pin | Wire colour | Function |
|---|---|---|
| 1 | Green | Extend (V DC +) |
| 2 | Red | N/A |
| 3 | White | N/A |
| 4 | Black | N/A |
| 5 | Yellow | Retract (V DC +) |
| 6 | Blue | N/A |

## NOTES

1. Self-locking force is reached when the motor terminals are short-circuited; all Movetec control boxes have this built in.
2. Please refer to the approved drawing for final authentic values.
3. Noise level measured without load (ambient noise ≤ 36 dB(A)).
4. The user is responsible for determining the suitability of the product for a specific application. Specifications are subject to change without notice.

**Need a custom version?**

Other strokes, connectors, cable lengths or Hall sensor feedback on request.

**www.movetec.dk**