BENDING MOMENT

Biegemoment | Bøjningsmoment

CONFIGURATION	INSTALLATION DIMENSION	VALUES
Stroke = 300 mm	**A = 420 mm**	**Nm**

LOAD DIRECTIONS

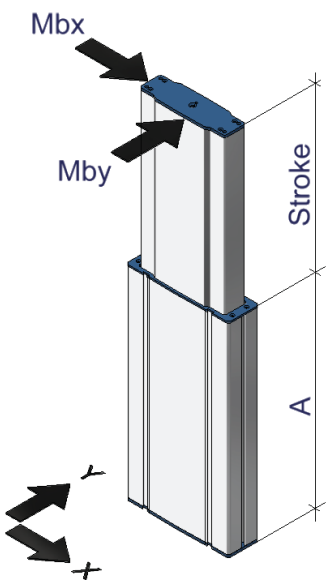

ALLOWABLE BENDING MOMENT

MODEL	STATIC (Nm)		DYNAMIC (Nm)	
	Mbx	Mby	Mbx	Mby
MAC2	500	1000	250	500
MAC7	800	800	400	400
MAC10	600	1200	300	600
MAC11	800	800	400	400
MAC14	800	1200	400	600
MAC15	900	900	450	450
MAC16				
MAC17				
MAC18	400	1000	200	500
MAC21	400	600	200	300
MAC31	1000	2000	500	1000
MAC32	1000	2000	500	1000

BENDING MOMENT

Biegemoment | Bøjningsmoment

CONFIGURATION	INSTALLATION DIMENSION	VALUES
Stroke = 600 mm	**A = 440 mm**	**Nm**

LOAD DIRECTIONS

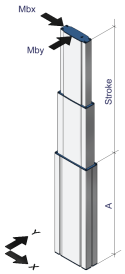

ALLOWABLE BENDING MOMENT

MODEL	STATIC (Nm)		DYNAMIC (Nm)	
	Mbx	Mby	Mbx	Mby
MAC4	400	1000	200	500
MAC5	400	1000	200	500
MAC12	1000	1000	500	500
MAC30	1200	2000	600	1000