Control Panel

MCP-032



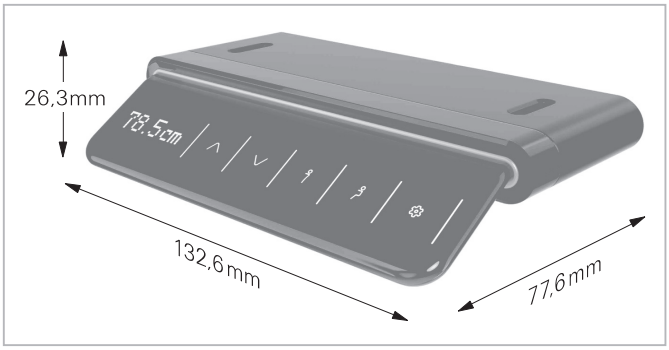

FEATURES:

- OLED display
- Slim Touch Keys with background light
- Smart appearance RGB light effect
- 2x memory buttons
- Bluetooth® support
- Startup logo in display
- Rich menu
- Supports TYPE-C fast charging (max. 18W)

UP/DOWN or PUSH/PULL Control Panel

With RGB light, display, memory, for under-table mounting

Smart appearance, RGB light effect, OLED display, Bluetooth®, Slim Touch Keys w/background light, TYPE-C fast charging (max. 18W), The MCP-032 Control Panel for the MCB-JSM Control Box series, is a good choice for a wide range of ergonomic office tables, workstation tables, workbenches, control centre tables, monitor walls and all other UP/DOWN, PUSH/PULL or IN/OUT functions in all applications which includes lifting columns or actuators.

The MCP-032 Control Panel is user-friendly. There are two memory buttons on the MCP-032 Control Panel/keypad. UP/DOWN operation mode is flexible and fast. Rich menu. Startup logo in display.

The MCP-032 Control Panel/keypad can easily be integrated into the design of a worktable or similar applications which includes lifting columns or actuators. The control panel for mounting under the table, are fastened to the table top from below with 2 screws.

Material specifications:

Control Panel: PC, PP, ABS and other plastics. Cable: PVC and other.

Technical data:

Control Panel size (WxH): 132,6 mm x 26,3 mm
Control Panel, depth: 77,6 mm (+cable)
Mounting holes: 5,2mm x 8mm. Mounting holes, quantity: 2
Mounting: Front-/under-table mounting
Built-in light: Yes
Display: OLED
TYPE-C fast charging: Supports TYPE-C fast charging (max. 18W)
System/Series: Control Panel for the JSM-Control Box series
Push buttons: Slim Touch Keys UP/DOWN, IN/OUT or PUSH/PULL
Color: Black, with RGB light effect
Marking/imprint: Startup logo in display
Memory function: Yes, 2 memory buttons
Bluetooth® support: Yes
Sealing: No, MCP-032 control panel should be protected against water and moisture exposure
Operating temperature: +5°C - +45°C
Cable length: Standard
Socket/Plug: -
Global certificates: CE-EMC, CE-LVD, UL, FCC, SAA, RCM

Options: Movetec offers other Control Panels in the JSM-serie, simple UP/DOWN and with display, Bluetooth®and memory functions.

Control Panel

MCP-032

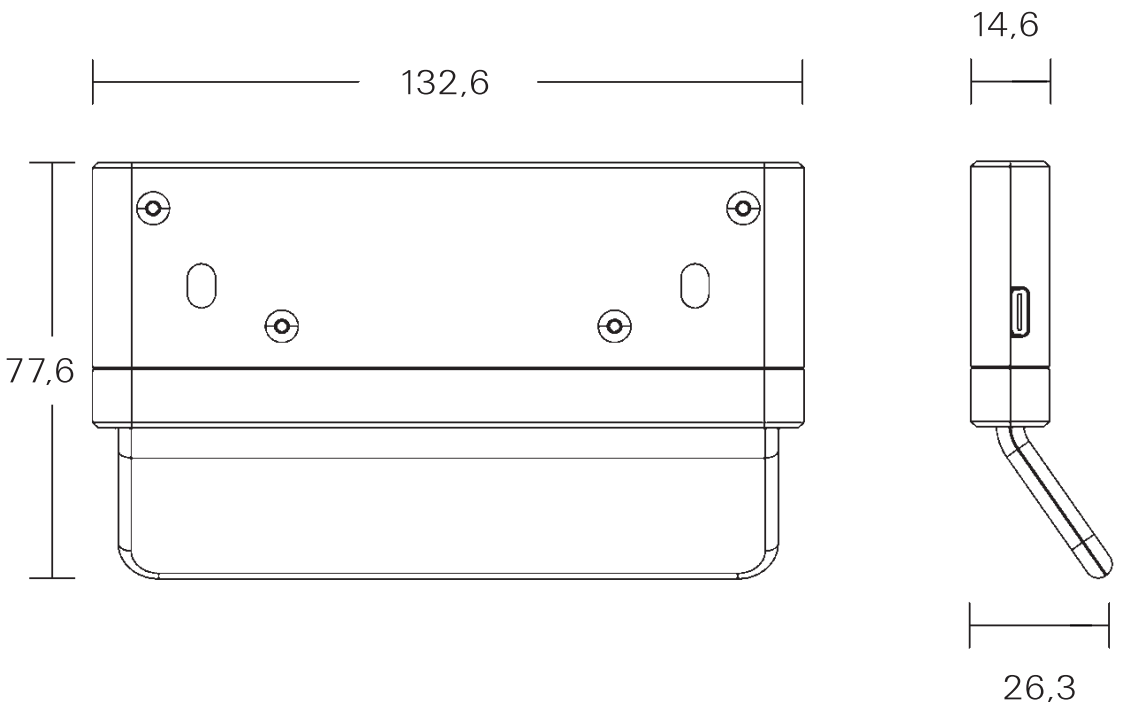

All dimensions in mm.

Further Information:

More information, good advices etc. - please contact us with your wishes, we are looking forward to your call: +45 64 89 28 05.

CAD-drawings:

Download 3D-drawings (STEP-Data) for the MCP-032 for your CAD-Program, or as a PDF-file, on our homepage, or contact Movetec by tel. (+45) 64 89 28 05 or email: info@movetec.dk

Manuals, installation instructions, approvals/certificates, Safety instructions etc.:

Installation manuals, assembly- and installation instructions, warnings, instructional videos and further information, can be found on our homepage: www.movetec.dk

Bluetooth® is a registered trademark and are the property of the owner Bluetooth SIG, Inc.
Android®/ Google Play® is registered trademarks and are the property of the owner Google Inc.
Apple®/ App Store® is registered trademarks and are the property of the owner Apple Inc.
Other trademarks and trade names are the property of their respective owners.

Further information → www.movetec.dk

INSTALL VIDEO PHOTO DATA+ BUILD E-MAIL 3D-CAD CE-APP

© Copyright Movetec Solutions ApS. LKD/MCP-032/dat338-UK/2/100/0525

MOVETEC

Tel. +45 64 89 28 05 · www.movetec.dk

True Innovative Moving Technology