Control Panel

MCP-031



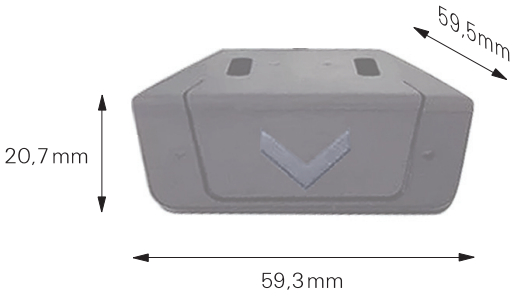

The MCP-031 Control Panel seen from below: The upward button is placed on the opposite side of the downward button on the front.



UP/DOWN or PUSH/PULL Control Panel

Standard 2-button Control Panel for under-table mounting

The MCP-031 Control Panel for the MCB-JSM Control Box series, is a good choice for a wide range of ergonomic office tables, work-station tables, workbenches, control centre tables, monitor walls and all other UP/DOWN, PUSH/PULL or IN/OUT functions in all applications which includes lifting columns or actuators.

The MCP-031 Control Panels buttons is user-friendly. There are two buttons on the MCP-031 Control Panel/keypad: one is downward button in the front; the other is upward button that is right on the opposite side of downward button.

With the small size, the MCP-031 Control Panel/keypad can easily be integrated into the design of a worktable or similar applications which includes lifting columns or actuators. The control panel for mounting under the table, are fastened to the table top from below with 2 screws.

Material specifications:

Control Panel: PC, PP, ABS and other plastics. Cable: PVC and other.

Technical data:

Control Panel size (WxH): 59,3mm x 20,7mm
Control Panel, depth: 59,5mm (+cable)
Mounting holes: 4,4mm x 18,4mm
Mounting holes, quantity: 2
Mounting: Front-/under-table mounting
Built-in light: -
System/Series: Control Panel for the JSM-Control Box series
Push buttons: 2 buttons; UP/DOWN, IN/OUT or PUSH/PULL
Color: Black
Marking/imprint: "V"
Memory function: No
Bluetooth®: No
USB charging: No
Sealing: No, MCP-031 control panel should be protected against water and moisture exposure
Operating temperature: +5˚C - +45˚C
Cable length: Standard
Socket/Plug: -
Global certificates: CE-EMC, CE-LVD, UL, FCC, SAA, RCM

Options: Movetec offers other Control Panels in the JSM-serie with display, Bluetooth®and memory functions.

Control Panel

MCP-031

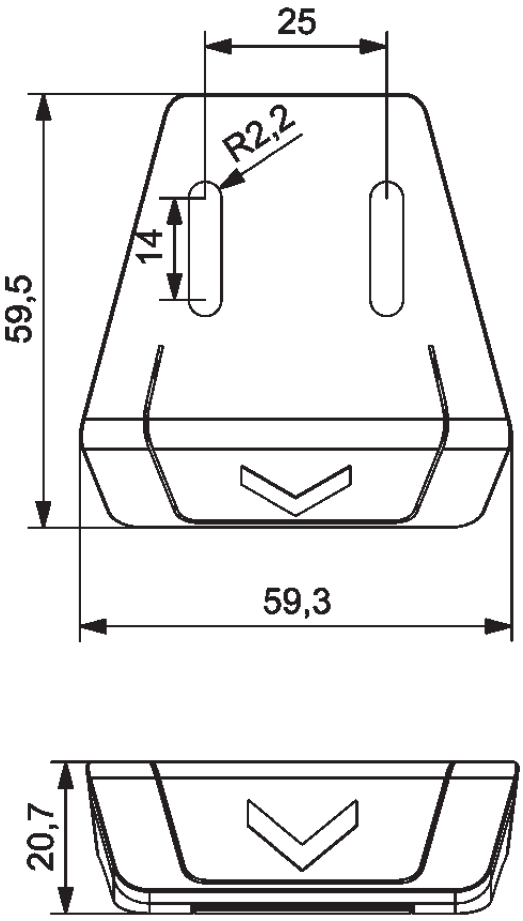

All dimensions in mm.

Further Information:

More information, good advices etc. - please contact us with your wishes, we are looking forward to your call: +45 64 89 28 05.

CAD-drawings:

Download 3D-drawings (STEP-Data) for the MCP-031 for your CAD-Program, or as a PDF-file, on our homepage, or contact Movetec by tel. (+45) 64 89 28 05 or email: info@movetec.dk

Manuals, installation instructions, approvals/certificates, Safety instructions etc.:

Installation manuals, assembly- and installation instructions, warnings, instructional videos and further information, can be found on our homepage: www.movetec.dk

Bluetooth® is a registered trademark and are the property of the owner Bluetooth SIG, Inc.
Android®/ Google Play® is registered trademarks and are the property of the owner Google Inc.
Apple®/ App Store® is registered trademarks and are the property of the owner Apple Inc.
Other trademarks and trade names are the property of their respective owners.

Further information → www.movetec.dk

INSTALL VIDEO PHOTO DATA+ BUILD E-MAIL 3D-CAD CE-APP

© Copyright Movetec Solutions ApS. LKD/MCP-031/dat335-UK/2/100/0525

MOVETEC

Tel. +45 64 89 28 05 · www.movetec.dk

True Innovative Moving Technology