Control Panel

MCP-030



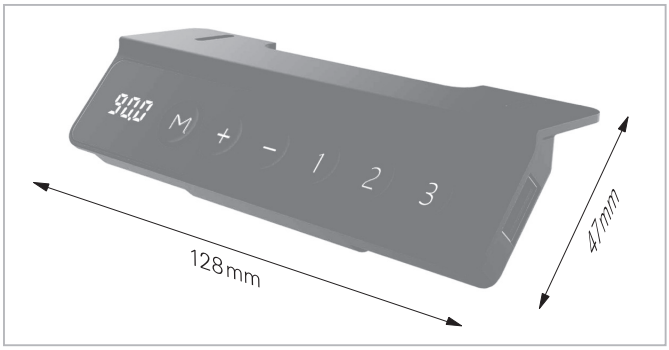

FEATURES:

- Display
- 3x memory buttons
- Push botton model
- Optional USB-charging
- Compact and flexible design

UP/DOWN or PUSH/PULL Control Panel

With display, memory, USB-charging, under-table mounting

The MCP-030 Control Panel for the MCB-JSM Control Box series, is a good choice for a wide range of ergonomic office tables, workstation tables, workbenches, control centre tables, monitor walls and all other UP/DOWN, PUSH/PULL or IN/OUT functions in all applications, which includes lifting columns or actuators.

The MCP-030 is a user-friendly Control Panel in a compact and flexible design, with 6 buttons. There are 3 memory buttons on the MCP-030 Control Panel. The MCP-030 Control panel is available with USB-charging (optional).

The MCP-030 Control Panel can easily be integrated into the design of a worktable or similar applications which includes lifting columns or actuators. The control panel for mounting under the table, are fastened to the table top from below with 2 screws.

Material specifications:

Control Panel: PC, PP, ABS and other plastics. Cable: PVC and other.

Technical data:

Control Panel size (W): 128mm
Control Panel, depth: 47 mm (+cable)
Mounting holes: 5,2mm x 8mm
Mounting holes, quantity: 2
Mounting: Front-/under-table mounting
Built-in light: -
USB charging: Optional
System/Series: Control Panel for the JSM-Control Box series
Push buttons: 6 buttons, UP/DOWN, IN/OUT or PUSH/PULL
Color: Black
Marking/imprint: "+/−" and memory buttons
Memory function: Yes, 3 memory
Bluetooth®: No
Sealing: No, MCP-030 control panel should be protected against water and moisture exposure
Operating temperature: +5˚C - +45˚C
Cable length: 1500mm standard
Socket/Plug: -
Global certificates: CE-EMC, CE-LVD, UL, FCC, SAA, RCM

Options: Movetec offers other Control Panels in the JSM-serie, simple UP/DOWN and with display, Bluetooth®and memory functions.

Control Panel

MCP-030

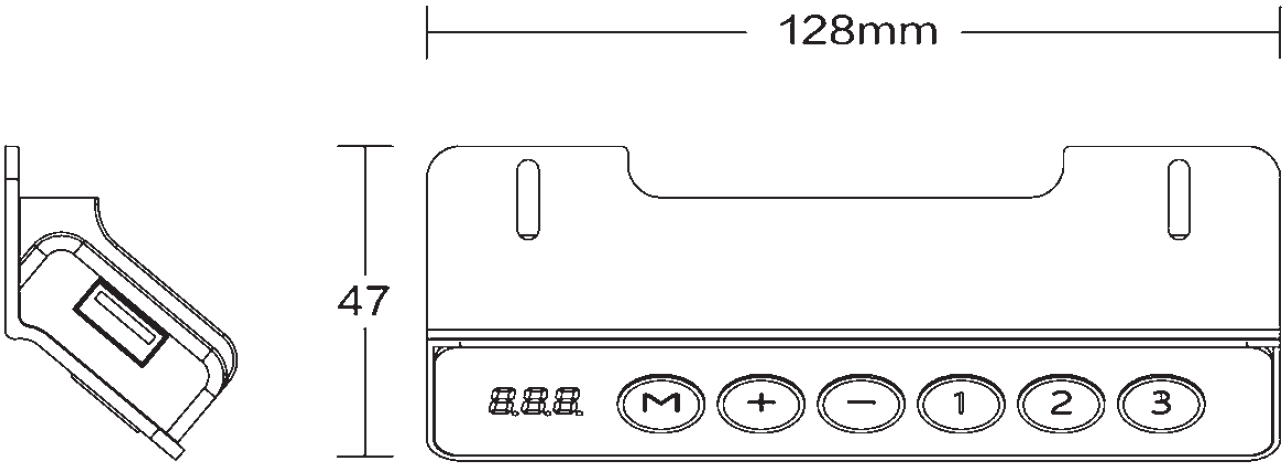

Further Information:

More information, good advices etc. - please contact us with your wishes, we are looking forward to your call: +45 64 89 28 05.

CAD-drawings:

Download 3D-drawings (STEP-Data) for the MCP-030 for your CAD-Program, or as a PDF-file, on our homepage, or contact Movetec by tel. (+45) 64 89 28 05 or email: info@movetec.dk

Manuals, installation instructions, approvals/certificates, Safety instructions etc.:

Installation manuals, assembly- and installation instructions, warnings, instructional videos and further information, can be found on our homepage: www.movetec.dk

All dimensions in mm.

Bluetooth® is a registered trademark and are the property of the owner Bluetooth SIG, Inc.
Android®/ Google Play® is registered trademarks and are the property of the owner Google Inc.
Apple®/ App Store® is registered trademarks and are the property of the owner Apple Inc.
Other trademarks and trade names are the property of their respective owners.

Further information → www.movetec.dk

INSTALL VIDEO PHOTO DATA+ BUILD E-MAIL 3D-CAD CE-APP

© Copyright Movetec Solutions ApS. LKD/MCP-030/dat337-UK/2/100/0525

MOVETEC

Tel. +45 64 89 28 05 · www.movetec.dk

True Innovative Moving Technology