Control Box for 1 Lifting Column or Actuator

MCB-JSM-1-00



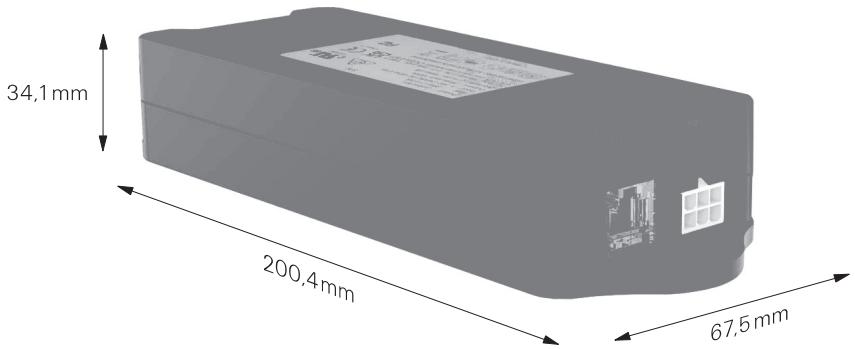

0.3 Watt
Standby Power Consumption

Control Box MCB-JSM-1-00

For 1 lifting column or actuator. Cable connection.

MCB-JSM-1-00 is a control box designed for use with height-adjustable worktables/worksplaces. It is also suitable and configured for all types of industrial and medical applications.

MCB-JSM-1-00 control boxes are based on the latest circuit topographies, components and using MOS tube program/conductor, and with gyroscope. The bus system supports easy configuration. System parameters can be modified using PC software computer control. Updating the program does not need to dismantle the shell, do not need AC power supply. Support Bluetooth® can use APP control (wireless). Features: Reverse brake function. High-precision collision protection.

Plug & Play: MCB-JSM-1-00 is a Plug & Play control box. It can be supplied as part of a complete set, with your choice of remote control devices, tailor-made lifting column or actuator, and cables.

Specifications:

Casing, plugs, sockets, cable: PC, ABS, PVC, PP, PE and others.

Technical data:

Control box capacity, number of lifting columns/actuators: 1
Applications: Suitable for all Movetec lifting columns and actuators
Cascade/synchronous operation: No
Synchronisation: -
Bluetooth® support: Yes (option)
Input voltage: 100-240 V 50/60 Hz, Input current: 2,5A
Output voltage: 24 V DC/100VA
Max. output: 150 W
Operating mode: 2 min. ON/18 min. OFF
Plugs and sockets for lifting columns and actuators: Molex 6-pole
Plugs and sockets for control panel devices: -
Continuous operation up to: 100 W total load
Hall sensor compatible: Yes
Standby power consumption: 0,3 W
Dimensions (L x W x H): 200,4 x 67,5 x 34,1 mm
Memory positions: Yes, depending on the control panel device
Collision protection/anti-collision system: Yes
Operating temperature range: +5° to +45° C
IP protection class: (IP20)
Approvals/certificates: CE, FC, UL, SAA, KC
Options: Additional functions (e.g. records position, go-to-position, etc., depending on control panel device version).

Control Box for 1 Lifting Column or Actuator

MCB-JSM-1-00

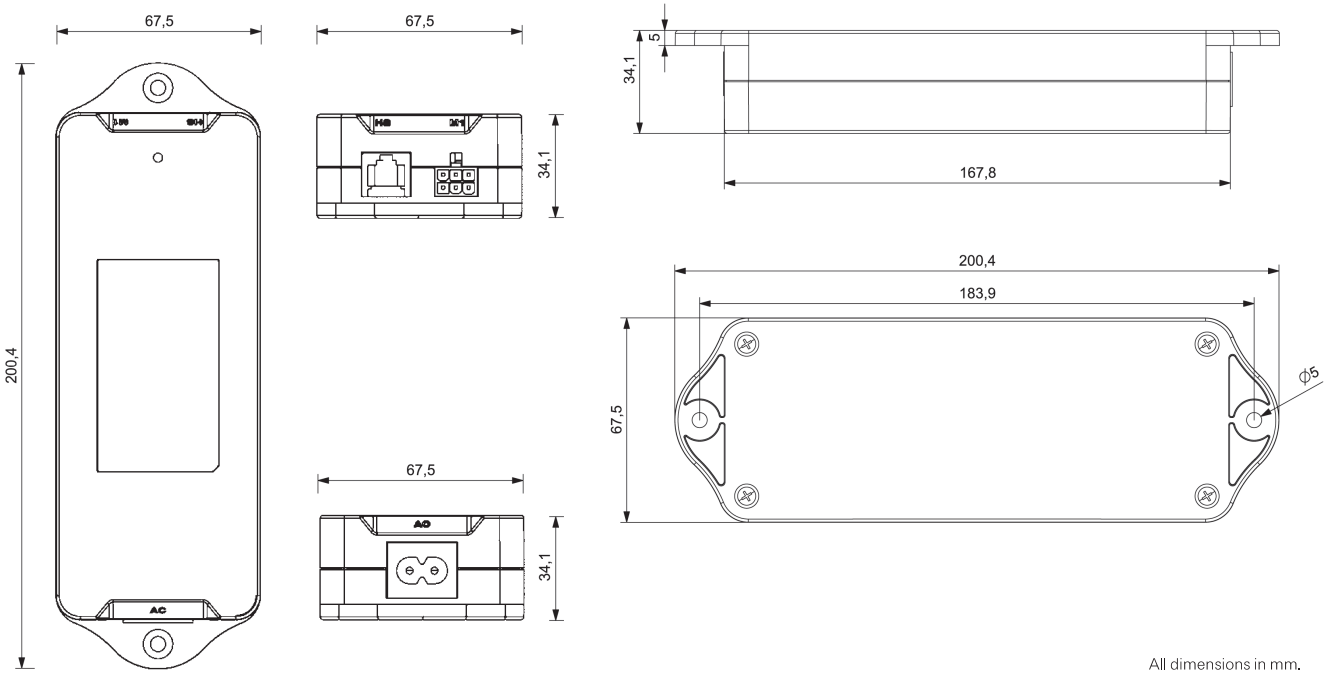

All dimensions in mm.

Optimal versatility: Movetec control boxes can be adapted to comply with precise customer requirements. If coordinated movements are required, we develop customised software for the application. The software may also include integration with a primary control system. Movetec control boxes are designed for use in e.g. furniture, ergonomic workspaces, medical or industrial applications.

Scalable software: Movetec offers high quality lifting columns and linear actuator systems. The control box functions as the system's brain and is therefore a key system element. Our highly motivated team of software engineers develops bespoke control box software and ensures a perfect match with system components. A tailor-made software design also offers more complex system functions, including synchronisation and simultaneous movement.

Individual, synchronised and simultaneous movements: Hall sensors transmit feedback signals to the control box. These signals give the precise current position of the electric lifting column or linear actuator. The signals can be used to provide synchronised and simultaneous movement on demand of two or more electric lifting columns or linear actuators. Applications that require synchronised movements include height-adjustable desks, hospital beds and innumerable industrial applications. Synchronised operation ensures that the lifting columns or actuators remain at the same level and move at the same speed. Without synchronisation, the lifting columns or actuators would move at different rates/levels.

Control panels, lifting columns and actuators:

MCB-JSM-1-00 can be used with various Movetec JSM control panel devices and Movetec lifting columns and actuators. An MCB-JSM-1-00 control box can be programmed to operate in customer- specific applications and functions. Together, we can develop a solution that matches specific customer requirements and wishes: Call us on +45 64 89 28 05.

CAD drawings:

You can download 3D drawings (STEP data) for MCB-JSM-1-00 either for use with CAD software or as PDF file from our website, or by email from Movetec.

Manuals, installation instructions, authorisations, safety information, etc.:

Declaration of compliance, fitting and installation instructions, warnings, video guidelines and other information material are available from our website: www.movetec dk.

Bluetooth | GET IT ON Google Play | Download on the App Store

Bluetooth® is a registered trademark and are the property of the owner Bluetooth SIG, Inc.
Android®/ Google Play® is registered trademarks and are the property of the owner Google Inc.
Apple®/ App Store® is registered trademarks and are the property of the owner Apple Inc.
Other trademarks and trade names are the property of their respective owners.

Further information → www.movetec.dk

INSTALL VIDEO PHOTO DATA+ BUILD E-MAIL 3D-CAD CE-APP

© Copyright Movetec Solutions ApS. LKD/MCB-JSM-1-00/dat339-UK/2/100/0525

MOVETEC

Tel. +45 64 89 28 05 · www.movetec.dk

True Innovative Moving Technology